POWER KNOCKER MANUAL

MITCHELL ENGINEERING
FOOD EQUIPMENT PTY LTD

Table of Contents

SECTION 1	**SAFETY** Warnings
SECTION 2	**BEFORE OPERATION**
SECTION 3	**GENERAL MAINTENANCE**
SECTION 4	**AIR COMPRESSOR SPECIFICATIONS**
SECTION 5	**INSTALLATION**
SECTION 6	**STUNNING PROCEDURES** Danger Stunning procedures Figure 6: Target location
SECTION 7	**OPERATION**
SECTION 8	**TROUBLESHOOTING**
SECTION 9	**ASSEMBLIES** Nose assembly Nose air break system Penetrator assembly Safety trigger assembly
SECTION 10	**DRAWINGS & PARTS**

SECTION 1: SAFETY

Safety must be the first and constant consideration of every person who handles or uses the Power Knocker™.

Power Knocker™ operators MUST read and carefully follow the warnings and instructions in this manual before using the Power Knocker™. They must also be properly trained on the Power Knocker™ and all aspects of the knocking operation. **All training is the responsibility of the company using the Power Knocker™.**

The Power Knocker™ system should be treated as a loaded firearm. The Knocker, if not used correctly, is a dangerous, lethal weapon. It must never be pointed at anyone. Never put any part of your body in front of the nose, which is like the barrel of a loaded gun. The Penetrator protrudes from the nose about 2" when fired and therefore is extremely dangerous. Designed to go through the skull of an animal much larger than a human's, the Power Knocker™ is a lethal device, which moves at the speed of a bullet. **IT IS IMPERATIVE THAT ALL OPERATORS READ THE WARNINGS AND INSTRUCTIONS THOROUGHLY AND FAMILIARIZE THEMSELVES WITH THE PROPER OPERATION OF THE POWER KNOCKER™ PRIOR TO USE. ANY OPERATOR WHO HAS DOUBTS ABOUT HIS OR HER ABILITY TO USE THE POWER KNOCKER SHOULD SEEK SUPERVISED INSTRUCTION.**

WARNINGS

FAILURE TO OBSERVE THESE WARNINGS COULD RESULT IN SEVERE PERSONAL INJURY OR DEATH.

1. Use the Power Knocker™ only for its intended use as described in this manual.

2. All persons who are using the Power Knocker™ must read this manual.

3. The Power Knocker should be handled in the same manner and treated with the same respect as a loaded firearm.

4. Be sure the Power Knocker™ is properly assembled as set forth in this manual and do not attempt to repair, replace or modify any part of the Power Knocker™ unless it is specifically recommended in this manual. All servicing not specifically set forth in this manual should be referred to a qualified Mitchell technician.

5. Post the provided warning signs in the working area indicating that the Power Knocker™ should be treated as a firearm.

6. Do not operate the Power Knocker™ with damaged air hoses or damaged parts or after the Power Knocker™ malfunctions, or has been damaged in any manner. Repair the Power Knocker™ according to the instructions in this manual or return the Power Knocker™ to an authorized Mitchell service facility for examination, repair or adjustments.

7. Operators must wear SAFETY GLASSES or goggles when using the Power Knocker™.

8. Operator must keep hands and body away from the nose or Penetrator end of the Power Knocker™ when the airlines are connected.

9. Power Knocker™ FIRES each time the safety trigger is pulled and contact is made with the head.

10. Although the safety trigger is provided to assist the operator with safe operation of the Power Knocker, the operator should never depend on a safety mechanism to justify careless handling of the Power Knocker.

11. Disconnect the airline when the Power Knocker™ is unattended, when servicing or making adjustments to the Power Knocker™ or prior to leaving the knocking area.

12. Be sure PRESSURE is 165-180 psi. The pressure gauge should be easily visible by the operator at all times. Failure to work within these parameters could result in injury.

13. Under the Fair Labor Standard Act, the use of the Power Knocker™ by operators UNDER THE AGE OF 18 IS PROHIBITED. For details see Child Labor Bulletin 101.

SECTION 2: BEFORE OPERATION

1. Read the entire Power Knocker™ Safety and Instruction Manual.

2. Put on safety glasses.

3. Check all external screws for tightness.

4. Make sure the air pressure is set correctly for the Power Knocker™.

5. Check the oiler to make sure it is working and the Power Knocker™ will receive the correct amount of oil.

SECTION 3: GENERAL MAINTENANCE

In order for the Power Knocker to operate efficiently and safely at all times, it must be properly maintained. The routine maintenance on the Power Knocker to keep the device in safe operating condition should be as follows:

1. All maintenance personnel who come into contact with the Power Knocker must be trained on operation and safety of the Power Knocker. In addition, they must read and carefully follow the instructions in the Power Knocker Safety and Instruction Manual.

2. Periodically, inspect the airlines at the knocking station for cuts or warn spots to prevent sudden line breakage that could cause injury.

3. When the airlines are connected treat the Power Knocker like a loaded firearm. The Power Knocker is potentially a lethal weapon when not used safely. The Penetrator comes out 4" at the speed of a bullet and must NEVER be pointed at anyone! NEVER put any part of your body in front of the nose.

4. Disconnect the airline before servicing the Power Knocker. **No maintenance should be performed while the airline is still connected.**

5. Do not pry, twist or force any part during servicing or damage may result. Check all screws and other fasteners periodically for tightness. Ordinary hand tools are adequate for all screws in the Power Knocker.

6. Make sure to follow the manufacturer's recommendation on the filter/oilier and use Air Lube Oil (Mitchell Part # 62052).

Regular Maintenance

In order for the Power Knocker to operate efficiently and safely at all times, it must be properly maintained. The routine maintenance on the Power Knocker should be as follows to keep the device in safe operating condition.

After every 2,000 animals stunned, replace the bumper (Mitchell stock number 93215) and piston o-rings (Mitchell stock number 93207). Coat the piston o-rings with grease (Mitchell stock number 10601).

Have a 180 - 185 PSI (120 - 150 PSI for veal) air line in the maintenance area so that the people that maintain the Power Knocker can check it before it goes out into the knocking area. All maintenance people who come in contact with the Power Knocker must be trained on operation and safety of the Power Knocker.

In addition, they must read and carefully follow the instruction in the Power Knocker manual and in the accompanying video.

After every 30,000 animals stunned, dismantle the Power Knocker and perform regular maintenance.

Also, inspect the air line and coil hose at the Power Knocker station for cuts or worn spots periodically to prevent sudden line breakage which could cause injury.

Remember when the air line is hooked up to the Power Knocker, treat it like a loaded firearm. The Power Knocker, if used unsafely, is a potentially dangerous, lethal weapon. The penetrator comes out approximately 4" at the speed of a bullet and must **NEVER** be pointed at anyone. Never put any part of your body in front of the nose, and always use the safety valve (Mitchell stock number 93221) on the air inlet when resting and disconnect the air supply when leaving the area or performing any maintenance on or in the area of the Power Knocker.

Disconnect the air supply before servicing the Power Knocker. No maintenance should be performed while connected to the air supply.

Do not pry, twist, or force any part during servicing or damage may result. Check all screws and other fasteners periodically for tightness. Ordinary hand tightening is adequate for most fastener applications in the Power Knocker; however, there is one application listed below, where use of a torque wrench is required.

(A) Nose assembly screws (Mitchell stock number 93258) should be torqued to 140/in lbs. (4 places).

SECTION 4: AIR COMPRESSOR SPECIFICATIONS

The Power Knocker should have its own air supply. You should not use any air supply that has other equipment attached. This could cause a drop in pressure and cause unwanted recoil off the head of the animal.

The recommended air compressor is Mitchell part #10843 that comes with an Allen-Bradley pressure regulator that maintains the air pressure within a range of 5 psi. This assures that the correct air pressure is always available for each shot. The pressure regulator should be set at 190 psi for the high limit and 185 psi for the restart limit.

SECTION 5: INSTALLATION

To be sure the Power Knocker™ is secure, convenient and efficient to operate at all times, it must be set up and used on a balancer system rated for 25 pounds. Using a balancer insures that if the Power Knocker™ is ever released, it will not fall into the knocking pen but will hang safely from the balancer.

The correct adjustment to the balancer that holds the Power Knocker™ positions it one foot above the animal's head. This allows for easy pull down and proper positioning on the animal's head while keeping it high enough so the animal cannot become entangled in the hose. Adjust the balancer so that the Power Knocker™ moves easily into firing position when pulled down.

The balancer is hung on a trolley from a single beef rail. The rail should be between 11' and 12' from the floor of the knocking box and should be centered over the box as well. When installed with a restrainer, the rail should be 7' to 8' above the top of the restrainer. To adjust the balancer, follow the balancer manufacturer's directions carefully. **When adjusting the balancer or performing either set up or maintenance operations, disconnect the airline.**

Placement of the compressor will depend upon the plant layout, but keep in mind that the line from the compressor to the Power Knocker™ should be less than 100 feet.

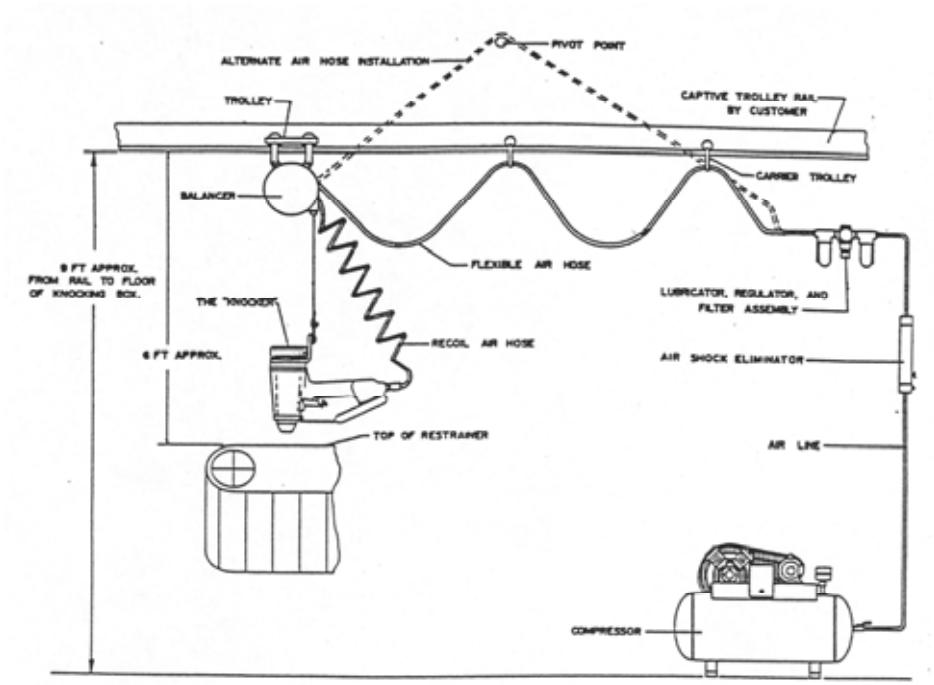

SECTION 6: STUNNING PROCEDURES

Safety glasses are required while operating the Power Knocker™ and a pair is provided with each unit. Safety glasses should be worn to protect the eyes from flying dirt, bone chips or any other foreign matter from the gun or animal.

Proper handling of the Power Knocker™ requires use of both hands. Handling the Power Knocker™ with one hand is dangerous. The correct way to hold the Power Knocker™ when stunning animals is to hold the handle in one hand with one or more fingers on the trigger. Place the other hand on the top of the device or on a side handle to help guide the Power Knocker™ into position for stunning.

Safe Power Knocker™ operation also requires that any recoil problems be avoided. To avoid problems associated with recoil, operators must begin by reading this entire manual. Power Knocker™ operators must be trained on the proper use and correct technique to avoid problems associated with recoil. Operators should be aware that if the Power Knocker™ recoils, it would always recoil straight back in a direct line behind the **penetrator.** Therefore, operators must keep their face and head away from the back of the Power Knocker™.

Never operate the Power Knocker™ in any way not specifically outlined in the manual.

When leaving the Power Knocker™ for any reason, always disconnect the airline. Also disconnect the airline when leaving the area for breaks, lunch or at the end of the day.

Have the quick disconnect on the airline changed immediately if it becomes difficult to work or is not functioning properly. The airline must be disconnected if maintenance personnel are in or around the knocking box, restrainer or underneath the restrainer.

When ready to proceed, connect the airline to the Power Knocker™ to be ready for the next use. Always be cautious and aware that the Penetrator comes out at the speed and force of a live bullet! Keep all body parts away from the front of the nose. **The Power Knocker™ is as dangerous as a high caliber weapon.**

When the animal is in position, depress the safety switch, approach the animal from the rear, maneuver the Power Knocker™ to the target spot, placing the nose over the skull and pull the main trigger. To produce instantaneous unconsciousness, use the correct positions for stunner placement as shown in Figure 6.

If your Power Knocker™ is equipped with the contact trip pull the main trigger and tap the animals head with the contact trip in the correct spot and the Power Knocker™ will fire.

Figure 6: Stunning Procedures. Target location & proper captive bolt stunner placement positions.

DANGER

- **THE POWER KNOCKER™ SHOULD BE TREATED WITH THE SAME RESPECT AS A LOADED FIREARM.**
- **OPERATORS MUST WEAR SAFETY GLASSES OR GOGGLES WHEN USING THE KNOCKER.**
- **DISCONNECT THE AIRLINE WHEN THE MACHINE IS UNATTENDED, WHEN PERFORMING MAINTENANCE OR ENTERING THE KNOCKING BOX.**

For cattle, the stunner is placed on the middle of the forehead on an “X” formed between the eyes and the base of the horns. For plants which save brains, place the stunner on the hollow behind the animal’s poll on the back of the head. This position is less effective, and the frontal position is recommended. A captive bolt is placed on the top of the head for sheep. This position is more effective for sheep because they have extra thick bone across the forehead. The captive bolt is placed on the forehead for hogs. A good stunner operator learns not to chase the animal’s head. Take the time and make one accurate shot. The stunner must be placed squarely on the animal’s head.

SECTION 7: OPERATIONS

How to Use the Power Knocker™

1. Connect the airline to the Power Knocker™ and slide the slide valve (#93221) toward the Power Knocker™. The Power Knocker™ will be ready to use.

2. To fire, pull or depress the safety trigger while positioning the nose of the Power Knocker™ over the ideal target on the head of the animal. When in position contact the head with the nose and the Power Knocker™ will fire. To fire a second time the operator has to contact the head again.

SECTION 8: TROUBLE SHOOTING

Problem: Power Knocker™ does not function when Trigger is engaged.

1. Make sure the airline to Power Knocker™ is connected and the slide valve (#93221) is slid forward.

Problem: Power Declines or Disappears.

1. Check air gauge for proper pressure.
2. Make sure the oiler is working properly, dropping 1 drop of oil every other shot.
3. Have maintenance check the piston o-rings (part #93207) for excess wear.

Problem: Penetrator does not return all of the way.

1. Make sure the penetrator moves in and out when the knocker is disconnected from the airline and if it does not, find out why.
   A. Make sure the knocker is getting the correct amount of oil.
   B. Make sure the penetrator moves through the nose bearing (#93173) freely.
2. Check the spring in the main valve (#93102) for wear and make sure it is in the correct way (**not upside down**). When reassembling the main valve always use a new lock-nut (#93115).

Problem: Penetrator sticks in the head.

1. Make sure the penetrator is the same diameter the full length. If the end gets damaged you should not sharpen it to a point, but it should be ground flat.
2. Check oiler to make sure there is not any drag on the o-rings on the piston.

SECTION 9: ASSEMBLIES

Nose assembly

Disconnect the Power Knocker™ from the air supply when left unattended or performing maintenance.

The Power Knocker™ is provided with an energy absorbing nose assembly consisting of a heavy nose (#93258) and a system of trapping air to help stop the penetrator assembly at the end of its stroke.

IMPORTANT……The nose bearing (#93173) should be replaced when the hole is worn so the diameter is the same size as the inside diameter of the nose (#93158). If this has excessive wear the “air stop” will not function and will allow the penetrator to hit the nose with enough force to destroy the bumper (#93215) and then the piston (#93209).

Special high strength screws (#93258) are used to secure the nose plate (#93158) to the Power Knocker™. Daily inspection for proper tension (140/ in lbs) on these screws (#93222) is required to avoid damage to parts. Always use lock washers (#93242) on these screws. **Do not use any lock tite.**

Insert nose bearing (#93173) into nose (#93258) and secure with clip (#93174). Washer (#10945) can be used if the nose bearing (#93258) is loose.

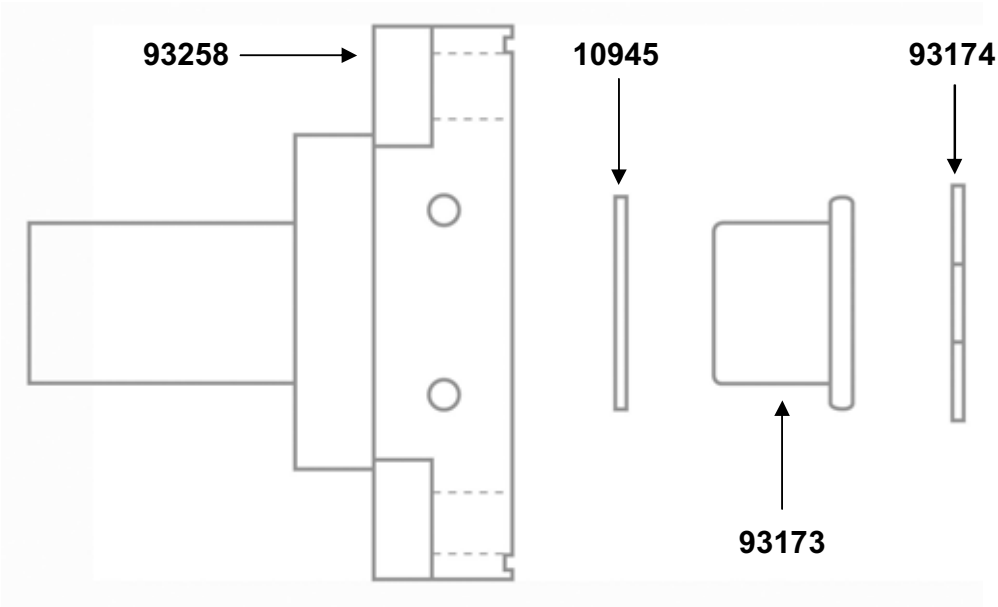

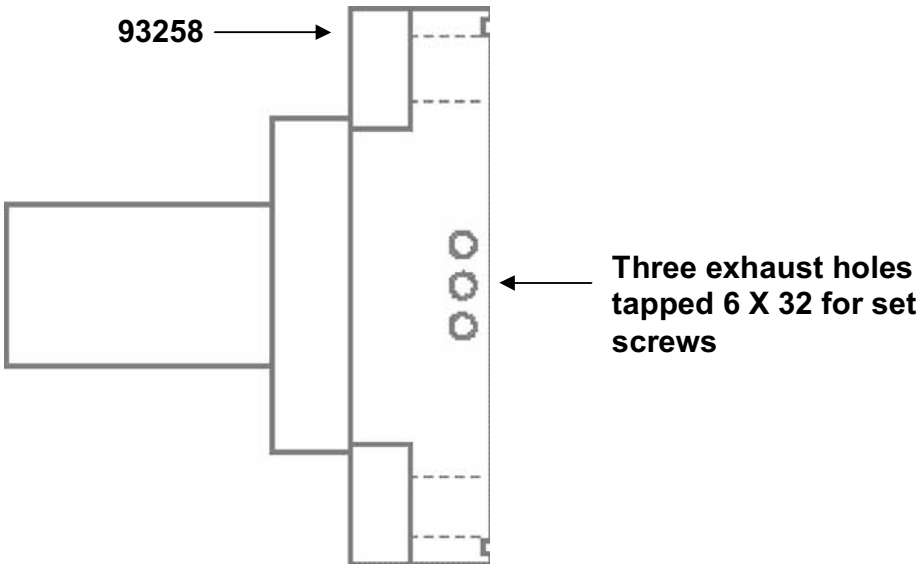

The three tapped holes on the side of the nose (#93258) are part of the air breaking and piston (#93209) return system. At sea level to 1000 feet above sea level the holes should be left open. If the Power Knocker™ is operating at higher altitudes it may be necessary to plug 1 or more holes with a 6x32 set screw. This should only be done if the piston (#93209) is not returning completely or the piston is hitting the nose with to much force. This adjustment should be made with some care because if the return is too hard it could damage the rear of the Power Knocker™. And at the other extreme, if the piston hits the nose to hard it could damage the piston (#93209) and shorten the life of the bumper (#93215). Once the Power Knocker™ is set up correctly at your plant no future settings will need to be made.

Remember to add the correct amount of set screws to the nose (#93258) if this part is replaced for any reason.

If the piston (#93209) is hitting the nose (#93258) too hard the air pressure may be turned down. The lower you can turn down the air pressure and still get a good stun, the longer the parts in the Power Knocker™ will last.

Penetrator Assembly

Be sure to use lock-tite 262 (#10994) on the threads of the nut (#93205).
Make sure the rear bumper (#93208) that fits in the rear of the nut is seated into the groove. Install 2 o-rings (#93207) on the piston (#93209). Apply an ample amount of Parker o-ring grease (#10601) to the o-rings (#93207) before you insert the assembly into the cylinder.

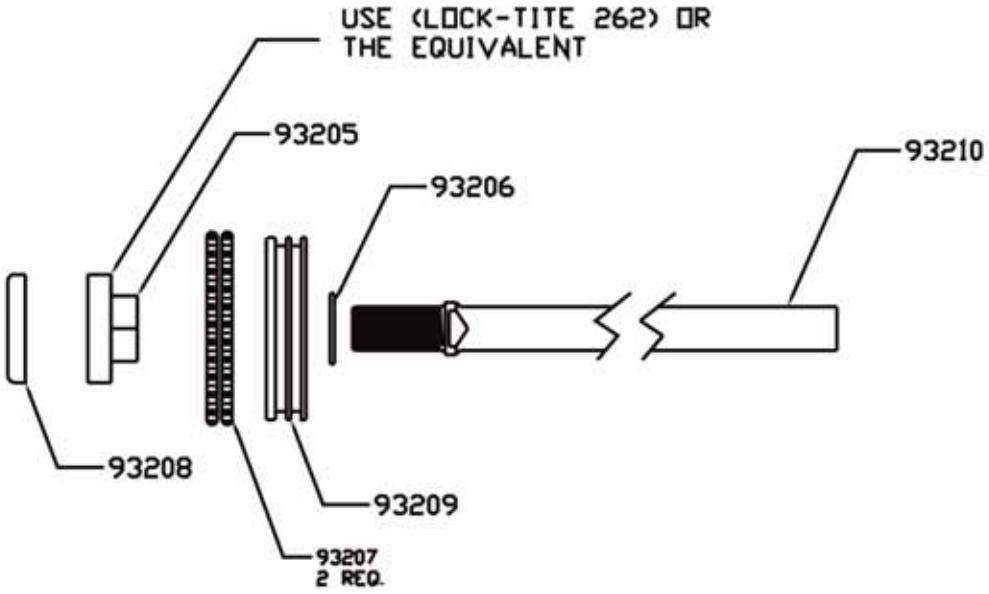

Setting the Length of the Concussion Tube

The stainless steel tube on the front of the concussion Power Knocker must be cut to the proper length to get the correct knocking power depending upon the size and type of animal being processed.

Mitchell recommends that a piece of rubber or PVC plastic tube cut the length of the stainless steel tube and fastened with a hose clamp to the threaded part of the nose.

Test the knocking power and if not correct remove ¼ inch at a time until correct knocking is achieved. Then cut the stainless steel tube to the correct length.

If you are knocking multiple size cattle (like calves in the morning and beef in the afternoon) purchase a second stainless steel tube (cut it to length) and switch tubes for the different animals.

Safety Trigger Assembly

Place the bearings (#93230) into the housing (#93217) making sure both are installed from the inside of the recess. The one closest to the body of the Power Knocker™ should be pushed in toward the body and the other one should be inserted away from the body. Next put the rod (#93231), with the shortest section first, into the bearings while placing the washer (#93233) and spring (#93232), onto the rod as you assemble it. Move the washer (#93233) and spring (#93232) toward the body of the Power Knocker™ and place an e-clip (#93234) onto the rod groove. Finally install the trigger (#93239) making sure the internal flip (#93247) of the trigger is in the position shown.

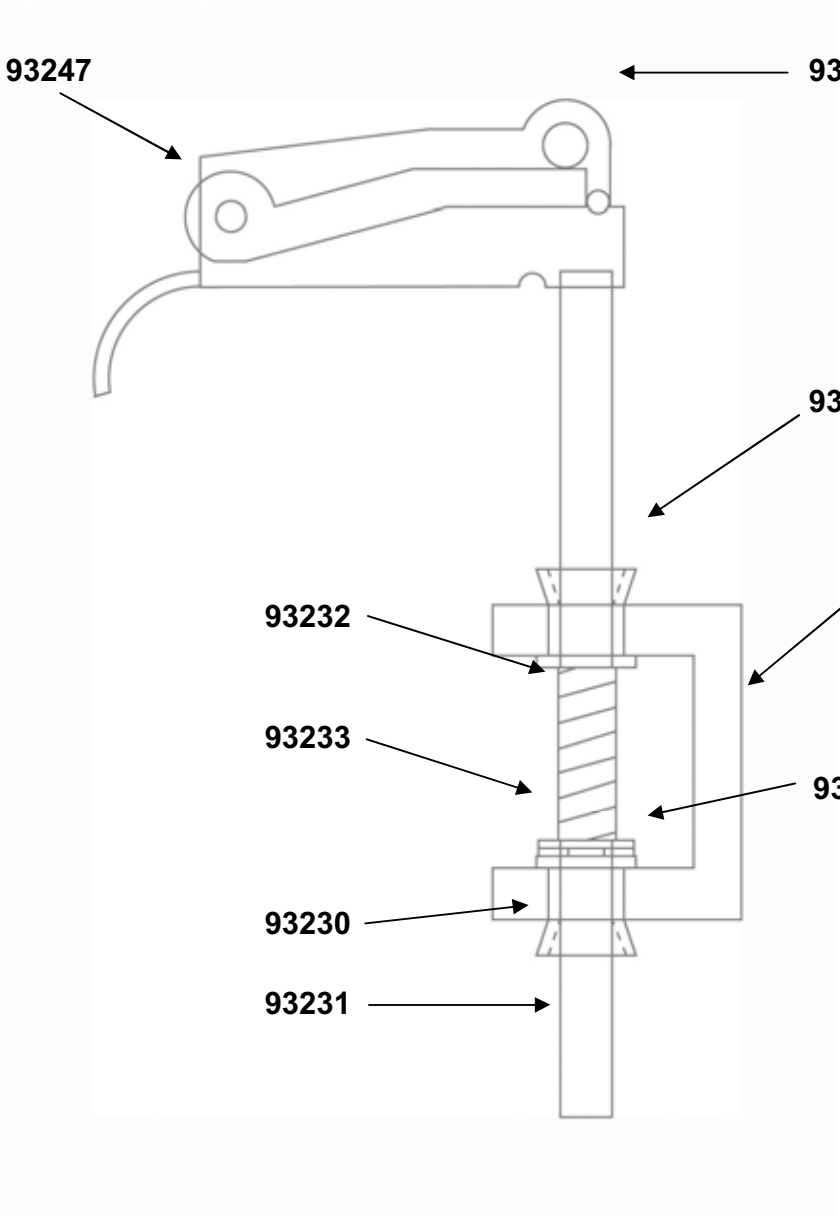

SECTION 10: DRAWINGS & PARTS

Concussion Assembly

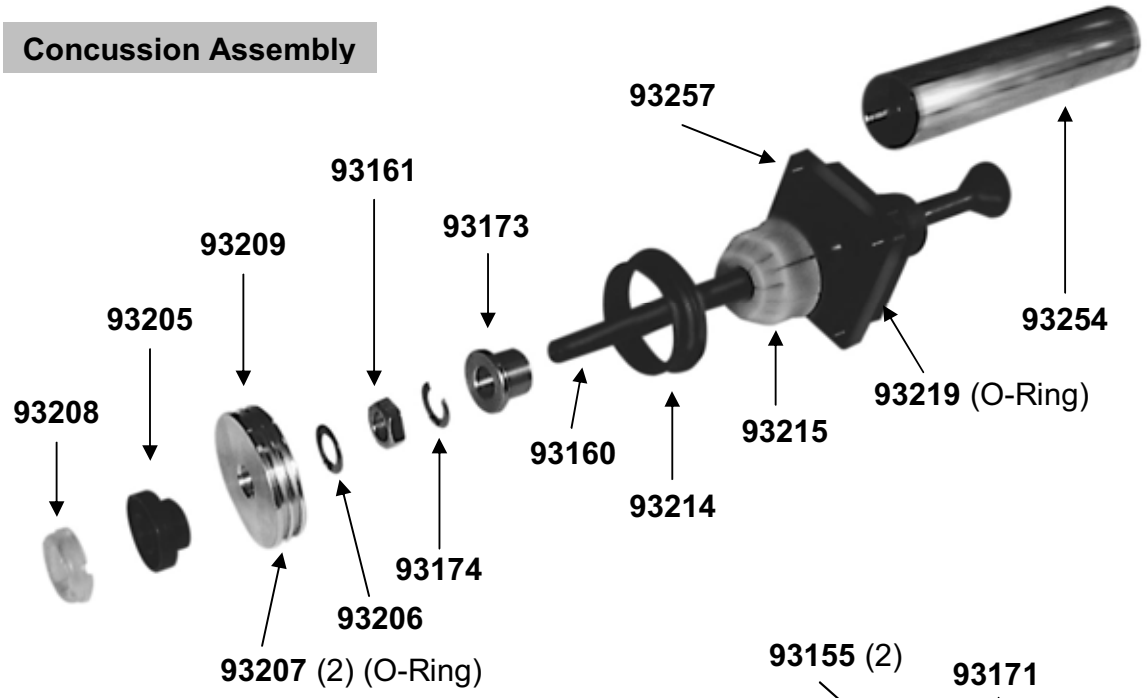

Contact Assembly

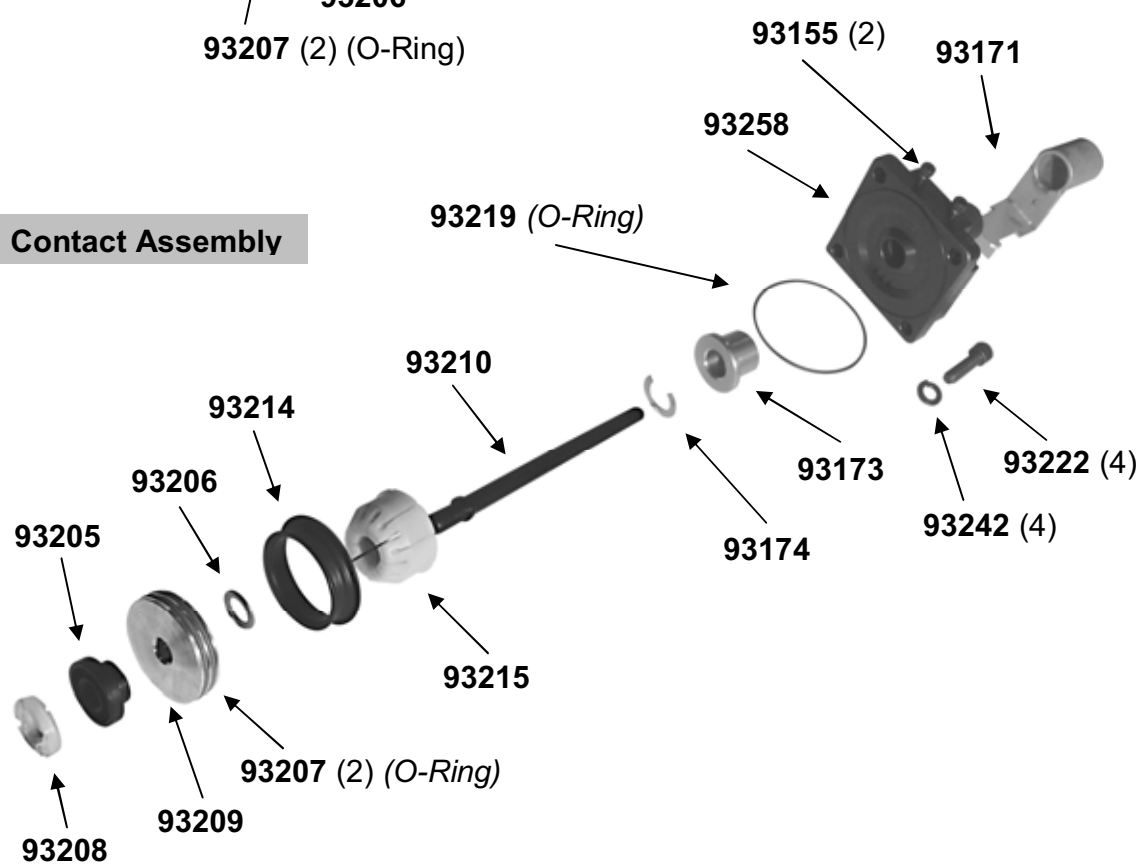

Main Valve Assembly

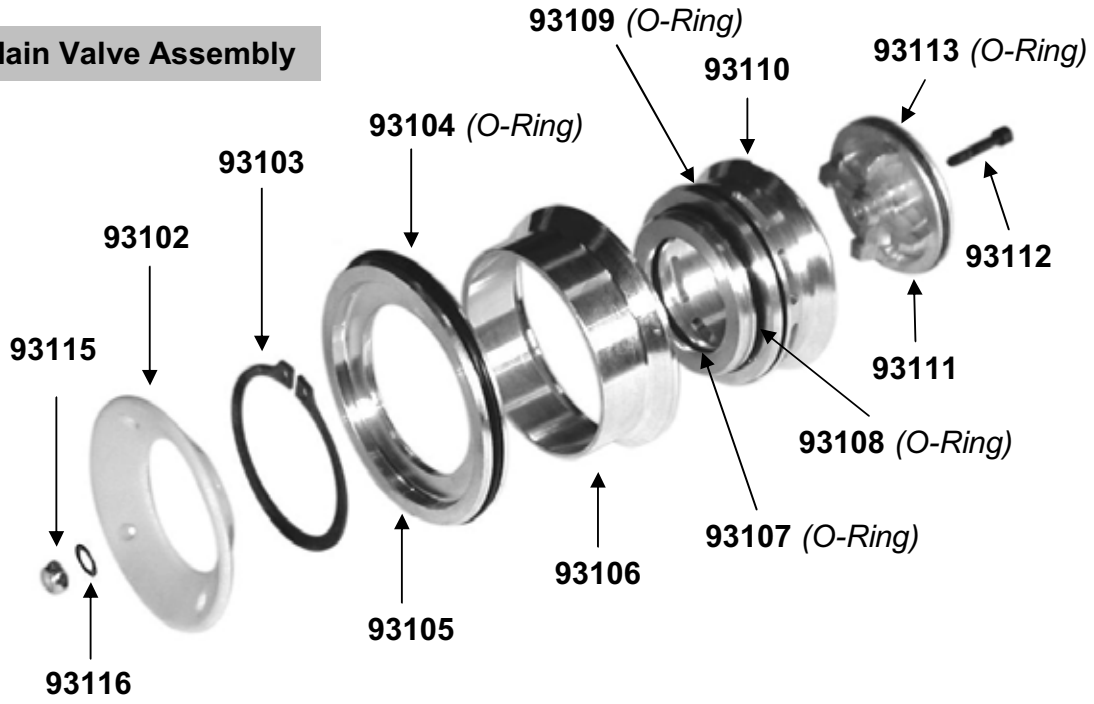

Trigger Contact Assembly

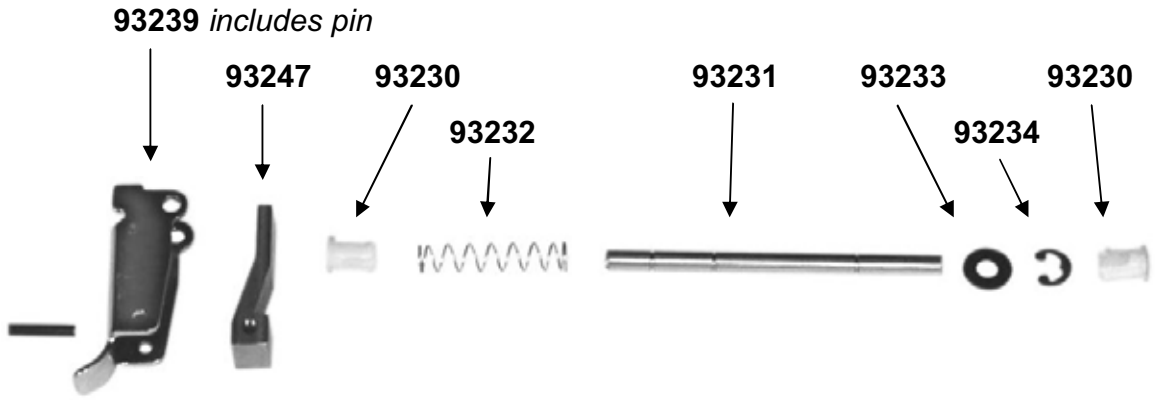

Body Assembly

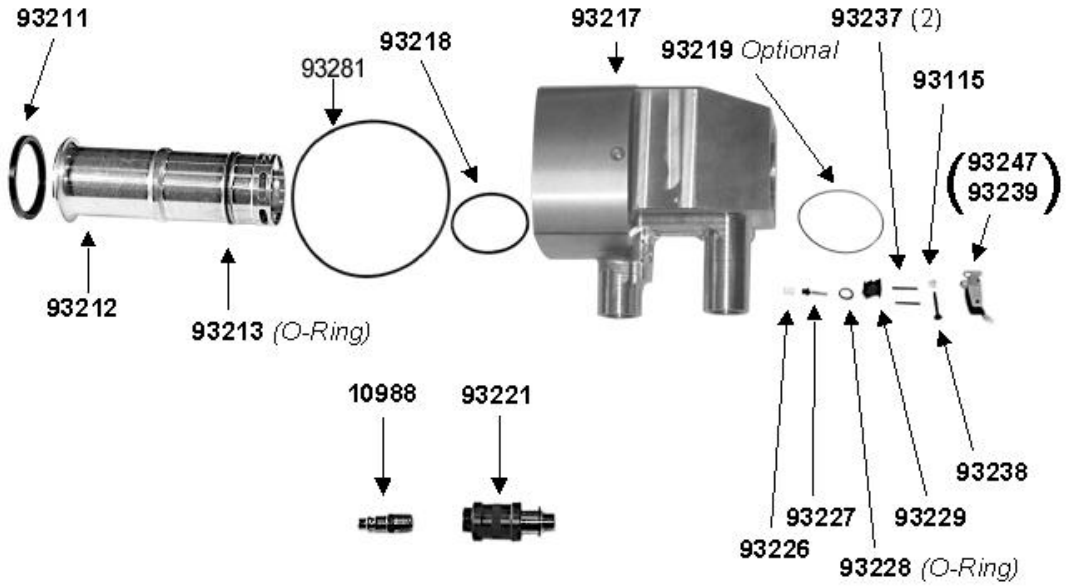

Housing Assembly

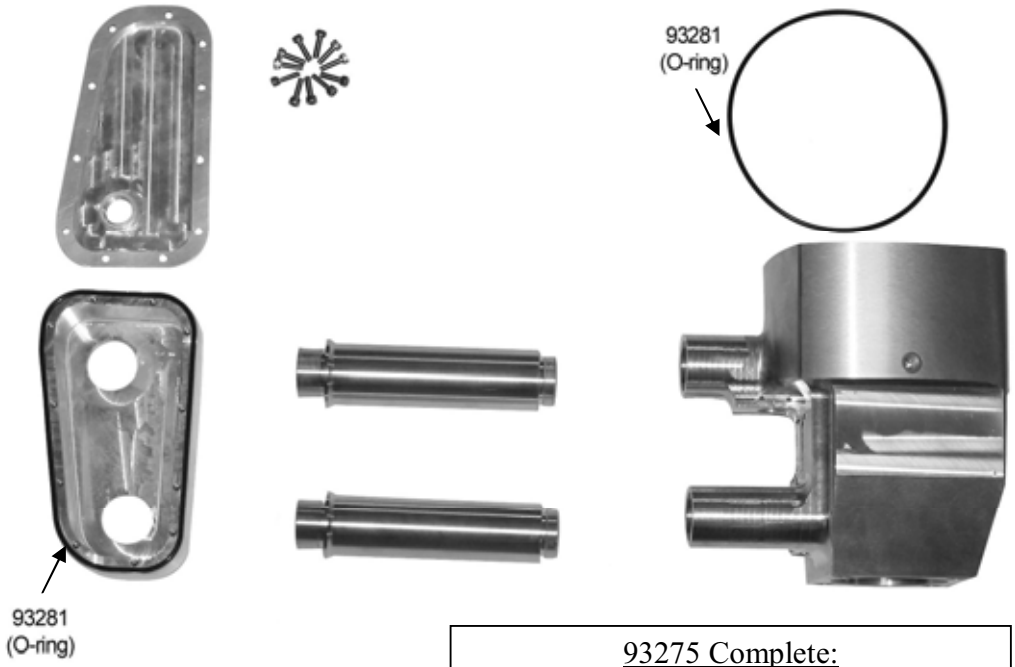

93275 Complete:

1-93281-O-ring
1 Body
1-Handle housing
1-Lid with screws

Valve Housing Assembly

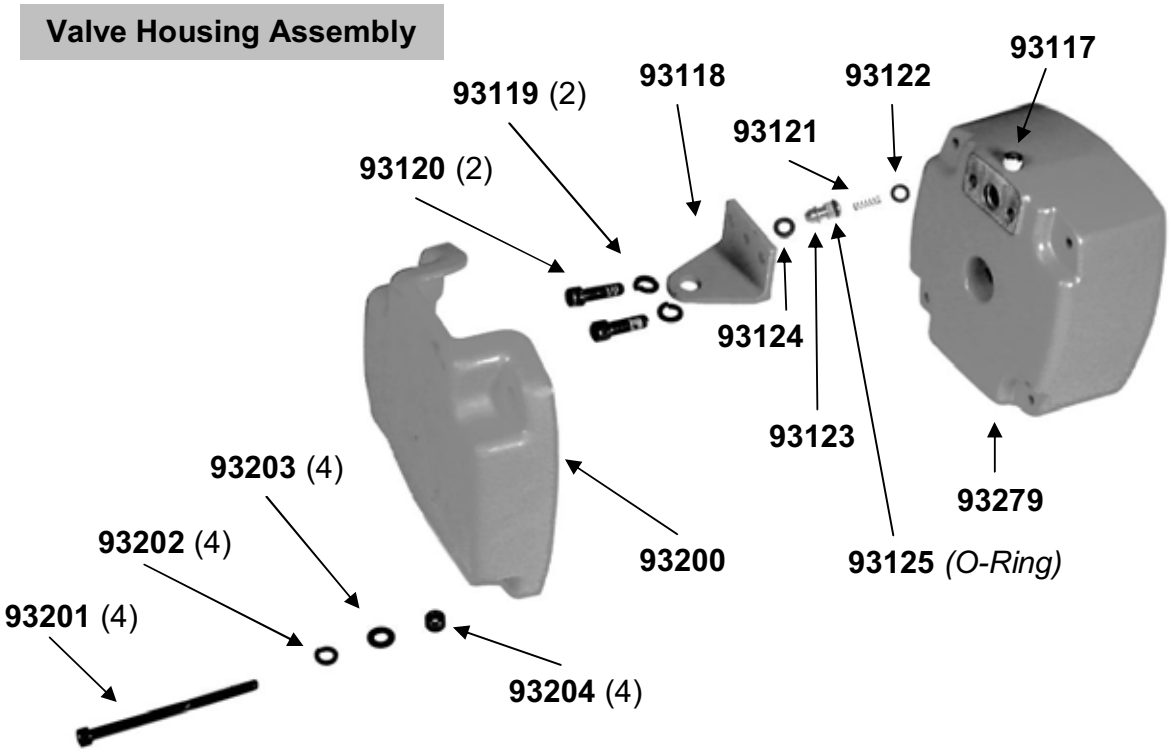

Handle/Hanger Assembly

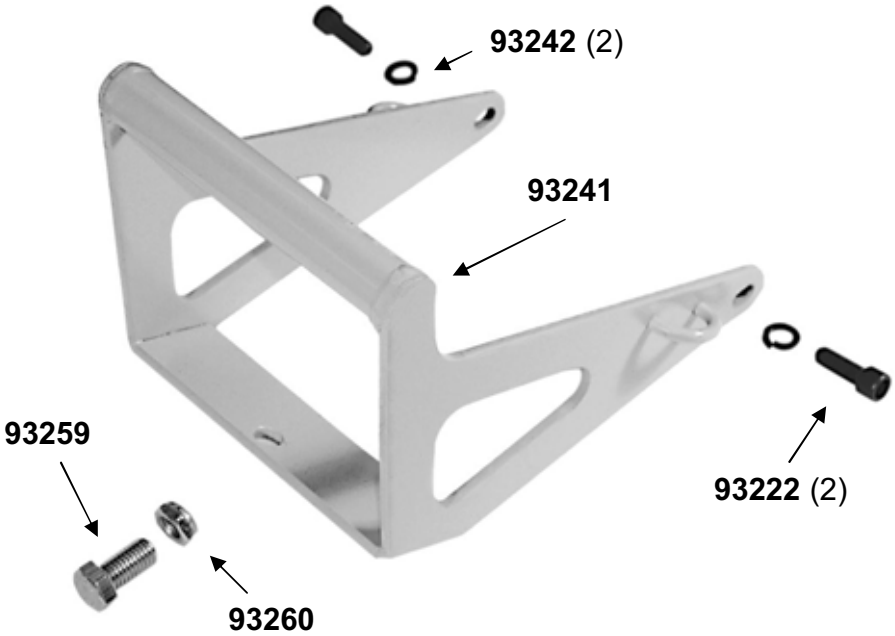

Part #			Description	Pcs
93000			Power Knocker	
93100			Cap ass'y	1
	93101		Valve, Main ass'y	1
		93102	Spring, main valve	1
		93103	Ring, retaining	1
		93104	O-Ring, outside piston	1
		93105	Piston, upper valve	1
		93106	Seal, Main upper valve	1
		93107	O-Ring, inside lower piston	1
		93108	O-Ring, small outer, lower piston	1
		93109	O-Ring, large outer, lower piston	1
		93110	Piston, lower valve	1
	93111		Post	1
	93112		Capscrew, Socket head	1
	93113		O-Ring, post	1
	93279		Cap, Machined	1
	93115		Locknut, post screw	2
	93116		Washer, post screw	1
	93117		Plug, cap	1
	93118		Bracket	1
	93119		Lockwasher, bracket	2
	93120		Capscrew, bracket, socket head	2
	93121		Spring, shuttle valve	1
	93122		O-Ring, shuttle valve, bottom	1
	93123		Valve, shuttle	1
	93124		O-Ring, shuttle valve, top	1
	93125		O-Ring, Shuttle valve	1
93127			Label, Safety	2
93128			Label, Warning	2
93129			Label, Danger (small)	3
93130			Label, Danger (large)	2
93138			Sign, Warning, English	1
93139			Sign, Warning, Spanish	1
10905			Handle, Aluminum W/Valves	1
93142			Handle, long extension	1
93145			Handle, Knocker, long complete	1
93155			Bolt, Shoulder (Contact Trip)	2
93160			Penetrator, Mushroom	1
93161			Nut, Penetrator, Mushroom	1
93171			Contact Trip Slide	1
93173			Nose Bearing, Stainless	1
93174			Clip, Internal Retaining	1
93200			Silencer cap, rubber	1
93201			Capscrew, Socket head	4
93202			Washer, Lock	4

Part #	_	_	Description	Pcs
93203			Washer, Flat	4
93204			Spacer, Silencer cap	4
93205			Nut, penetrator	1
93206			Washer, penetrator	1
93207			O-Ring, piston	2
93208			Bumper, piston, rear	1
93209			Piston	1
93210			Penetrator	1
93211			Seal, sleeve	1
93212			Sleeve	1
93213			O-Ring, sleeve, outer	1
93214			Bumper plate	1
93215			Bumper	1
93275			Housing ass'y	1
93218			O-Ring, housing	1
93219			O-Ring, nose plate	1
10945			Seal, noseprotector	1
93221			Valve, Slide-Safety	1
93222			Capscrew, Socket head, nose	4
93223			O-Ring, air tube to trigger	5
93225			Pipe bushing, reducing 1/2>3/8	1
93226			Spring, trigger pin	1
93227			Pin, Trigger valve	1
93228			O-Ring, trigger valve body	1
93229			Valve body, Trigger	1
93230			Bearing, Flanged	2
93231			Rod, Safety	1
93232			Spring, Safety	1
93233			Washer, Safety	1
93234			E-clip, Safety	1
93236			Thread insert, # 90411 3/8-24	4
93237			Roll, Pin	2
93238			Pin, Trigger	1
93239			Trigger	1
93240			Handle, Plastic, Complete	1
93241			Hanger	1
93242			Washer, Lock	6
93243			Capscrew, Socket Head	3
93247			Trigger, Insert	1
93257			Nose. Combo, concussion	1
93258			Nose, Contact	1
93259			Bolt, Hex Head 1/2x13-1"	1
93260			Nut, Nylock	1
93261			Coupling, flexible	1
93264			Trigger-veal, for concussion	1
93281			O-Ring-body and air chamber	2

Part #	_	_	Description	Pcs
93282			O-Rings for handles	4
93285			Kit, Power Knocker, start up	
10835			Shock Eliminator, Air	1
10991			Hose, Coil	1
25485			Balancer	1
10601			Lubricant, O-Ring	1
10988			Air fitting	1
93261			Coupling Flexible Air Inlet	1