Operating Manual

X7 Sharpening Machine

CAT 139 X7

CAT 139 X7V





Revision 1
MEFE

Contents

Important Information 3
Product Description 3
Technical Specifications 4
Safety Information 4
General Safety 4
Personal Protective Equipment (PPE) 4
Operator Responsibilities 5
Before Starting the Machine 5
Electrical Safety 5
Modifications & Warranty Compliance 5
Installation & Initial Setup 5
Machine Location 5
Unpacking and Inspection 6
Levelling the Machine 6
Coolant System Setup 6
Electrical Connection 7
Initial Startup Check 7
Operation 7
Starting the Machine 7
To start Model CAT 139 X7 (Fixed Speed): 7
To start Model CAT 139 X7V (Variable Speed Inverter): 7
Belt Tracking Adjustment 8
Coolant Flow Adjustment 9
Grinding Belt Replacement 9
Knife Sharpening 9
Hollow Grinding and Sharpening 10
Edge Finishing and Polishing 10
Shutdown Procedure 11
Routine Maintenance 11
Changing the Polishing Wheel 12
Consumables / Spare Parts 13
Exploded View 15
Wiring Diagram 16

Important Information

Purpose of This Manual

This manual provides instructions for:

- Safe operation
- Installation
- Setup
- Sharpening procedures
- Maintenance
- Troubleshooting

Intended Users

This machine must only be operated by trained personnel familiar with knife sharpening equipment.

Keep This Manual

Store this manual near the machine and make it available to all operators.

Product Description

Machine Overview

The MEFE X7 Series is an industrial belt sharpening machine designed for sharpening and polishing knives used in meat processing, food production, commercial kitchens, and other professional cutting applications.

- Sharpening butcher knives
- Processing knives
- Commercial kitchen knives
- Food industry cutting tools

Key Features

- Right-Hand Station: 50 × 950 mm wet grinding belt with adjustable belt tracking.
- Left-Hand Station: Quick-change bayonet spindle compatible with felt polishing wheels, flap wheels, mix wheels, or ceramic grinding wheels.
- Integrated Coolant System: Closed-loop recirculating water/coolant tank and submersible electric pump to prevent blade overheating and oxidation.
- Construction: Heavy-duty compact stainless steel body with adjustable levelling feet.

Available Models:
CAT 139 X7 -Fixed operating speed via front green/red push-button switch

X7V - Variable speed control via an Optidrive E3 Inverter, allowing operators to optimise belt and wheel speed for different blade steels and finishes.

Technical Specifications

Specification	CAT 139 X7	CAT 139 X7V
Power Supply	230V AC, 50Hz, 2A (RCD protected outlet required)	230V AC, 50Hz, 2A (RCD protected outlet required)
Main Motor / Pump Power	375W (0.5 HP) main motor / 55W coolant pump	375W (0.5 HP) main motor / 55W coolant pump
Internal Fuse	6.3A	6.3A
Speed Control	Fixed speed	Variable speed (Optidrive E3 Inverter)
Grinding Belt Size	50 x 950mm	50 x 950mm
Polishing / Grinding Wheel Size	200 × 25 × 32 mm (or 76 mm bore for flap/mix wheels)	200 × 25 × 32 mm (or 76 mm bore for flap/mix wheels)
Coolant Tank	Approx. 5 Litres (with 5% / 250 mL coolant mix)	Approx. 5 Litres (with 5% / 250 mL coolant mix)
Dimensions (L x W x Hmm, kg)	580 × 450 × 350mm, 30kg	580 × 450 × 475mm, 33kg

Safety Information

General Safety

- Read and understand this manual before operating the machine.
- Keep this manual available to all operators.
- Only trained personnel familiar with knife sharpening equipment should operate this machine.
- Use the machine only for its intended purpose of sharpening and polishing knives.
- Keep the work area clean and free from unnecessary hazards.
- Keep unauthorised personnel away from the machine during operation.
- Do not use the machine in flammable or explosive environments.

Personal Protective Equipment (PPE)

The following PPE should be worn when operating the machine:

- Safety glasses
- Cut-resistant gloves when handling blades
- Non-slip safety footwear
- Suitable fitted clothing







Operator Responsibilities

Operators are responsible for:

- Starting and stopping the machine correctly.
- Performing adjustments as described in this manual.
- Operating the machine in accordance with all safety instructions.
- Reporting damaged or unsafe equipment before use.

Before Starting the Machine

Before operation:

- Confirm no maintenance work is being performed on the machine.
- Check that all guards are correctly fitted.
- Ensure there are no unsafe conditions around the machine.
- Correct any safety issue before starting operation.

Electrical Safety

Connect the machine only to a suitable 230V AC, 50Hz power supply.

The machine does not contain its own residual current protection.

The power outlet supplying the machine should be protected by an RCD (Residual Current Device).

Disconnect the machine from power before maintenance or repairs.

Modifications & Warranty Compliance

This machine is designed exclusively for commercial and industrial knife sharpening.

Only use genuine MEFE / Temeca spare parts and consumables. Any unauthorised modifications or use of non-original parts will void warranty and operator safety compliance.

Installation & Initial Setup

Machine Location

Install the machine:

- On a stable, level surface.
- In a clean, dry environment.
- In an area with adequate lighting.
- With sufficient space around the machine for safe operation and maintenance.
- Away from flammable or explosive materials.

Unpacking and Inspection

Upon receipt of the machine:

- Remove all packaging materials.
- Inspect the machine for any signs of transport damage.
- Verify all components are present.
- Report any damage before commissioning the machine.

Levelling the Machine

- Position the machine in its intended operating location.
- Adjust the machine feet as required.
- Ensure the machine is level and stable before operation.

Coolant System Setup

- Slide the coolant tray directly underneath the right-hand grinding belt housing.
- Place the submersible electric pump inside the tray and connect the coolant feed hose.
- Fill the tank with 5 litres of clean water and add 250 mL of suitable green grinding coolant concentrate (5% ratio).
- Important: Always ensure the electric pump is completely submerged during operation. Running the pump dry will burn out the motor.



The X7 Series is designed to operate with a recirculating coolant system. Use of coolant is highly recommended to improve grinding performance, reduce belt wear, and minimise heat build-up on the blade edge.

Recommended coolant mixture:

- 5L water
- 250mL coolant concentrate
- 5% concentration



Suitable grinding coolants designed for knife sharpening applications should be used.

Note: The machine can be operated without coolant for some applications; however, use of coolant is recommended for best results and extended consumable life.

Electrical Connection

- Verify the power supply is 230V AC, 50Hz.
- Ensure the outlet is suitably protected.
- Connect the machine to the power supply.
- Ensure the power cable cannot create a trip hazard.

Initial Startup Check

Before switching the machine on for the first time:

- Verify that the grinding belt protective cover is properly tightened and secured.
- Confirm the polishing wheel retaining screw is tight and the Allen key has been removed.
- Check that the power outlet (230V AC, 50Hz) is protected by a Residual Current Device (RCD).
- Confirm the coolant level is full and the pump is circulating coolant evenly onto the belt.
- Start the machine and check that the belt tracks centrally without abnormal vibration or noise.

Operation

Starting the Machine

Before starting the machine:

- Ensure all guards and protective covers are fitted and secured.
- Verify the grinding belt is correctly installed and centred.
- Confirm the polishing wheel retaining screw is tight and the Allen key has been removed.
- Check that the coolant tank is filled and the electric pump is completely submerged.
- Ensure the work area is clear of obstructions.

To start Model CAT 139 X7 (Fixed Speed):

1. Connect the machine to a 230V AC, 50Hz RCD-protected power outlet.
2. Press the green ON (I) push-button switch on the front of the machine.
3. Verify the grinding belt rotates properly and tracks centrally on the rollers.
4. Check that coolant is flowing evenly onto the grinding belt before sharpening.
5. Press the red OFF (O) push-button switch to stop the machine.

To start Model CAT 139 X7V (Variable Speed Inverter):

1. Connect the machine to a 230V AC, 50Hz RCD-protected power outlet.
2. Confirm the inverter Stop–Run Switch is in the centre OFF (.) position.
3. Turn the yellow/black General Switch (Main Isolator) clockwise to Position I.
4. Turn the Stop–Run Switch to the right ON (>>) position to start the belt and wheel.
5. Rotate the Potentiometer Dial to adjust the operating speed—the digital LED screen displays the frequency in Hertz (for example, 24.0 Hz for slower, controlled work up to 50.0 Hz for full speed).

6. Verify the grinding belt tracks centrally and coolant flows evenly before sharpening.
7. To pause or stop during work, return the Stop–Run Switch to the centre (.) position. Turn the General Switch back to 0 when finished.



Belt Tracking Adjustment

The grinding belt should run centrally on the rollers during operation.

To adjust belt tracking:

- Start the machine.
- Observe the position of the grinding belt.
- Slowly rotate the tracking adjustment knob.
- Continue adjustment until the belt runs centrally on the rollers.
- Verify stable belt tracking before operation.

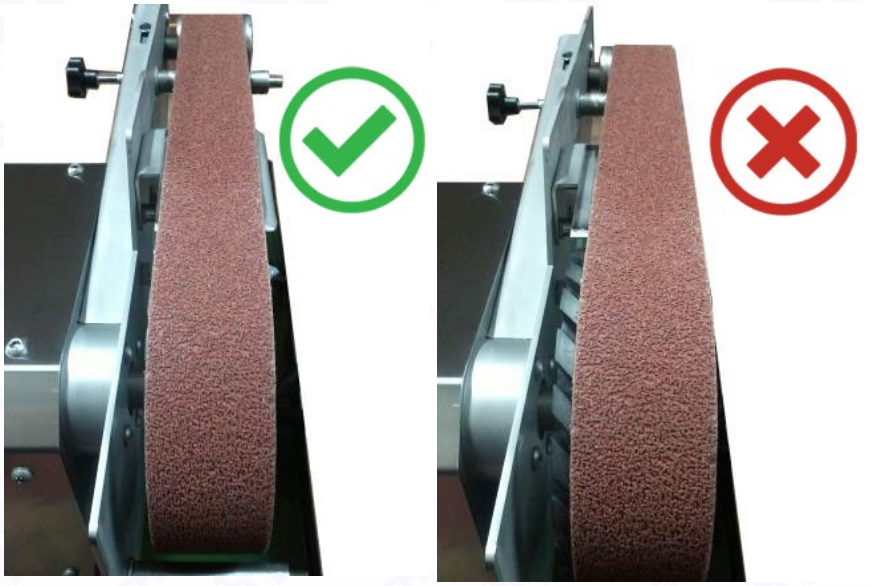

Important: Small adjustments should be made gradually to avoid over-correcting belt position.

Coolant Flow Adjustment

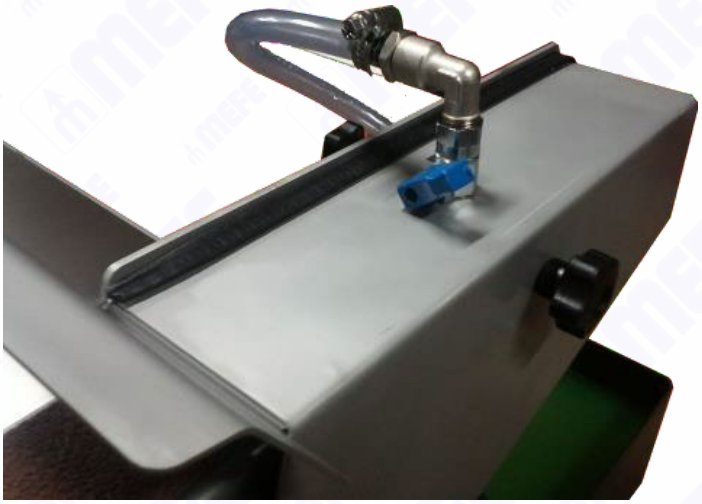

- Open the blue stopcock valve located above the grinding belt housing to regulate the coolant flow.
- Adjust the valve so a light, consistent film of coolant wets the grinding belt—only a minimal flow is required to keep the blade cool.
- Avoid excessive coolant flow, which causes unnecessary splashing and coolant waste.
- Periodically check the coolant flow during operation and top up the tank with a 5% water/coolant mix to replace water lost through evaporation.

Grinding Belt Replacement

Grinding belts are consumable items and should be replaced when worn, damaged, or when sharpening performance has reduced.

To Replace the Grinding Belt



- Switch the machine OFF and disconnect it from the power supply.
- Remove the protective cover.
- Push the belt tension levers.
- Remove the grinding belt.
- Install the replacement belt.
- Reapply tension using the levers.
- Refit the protective cover.
- Check that the belt is centred on the wheels before restarting the machine.

Important:

- Always use the correct belt size (50 x 950mm).
- Replace damaged belts immediately.
- Verify belt tracking after every belt change.

Knife Sharpening

Before sharpening:

- Ensure the grinding belts, grinding wheels and polishing wheel are correctly fitted and securely fastened.
- Start the machine using the power switch.
- Verify the grinding belts are centred on the wheels. If required, adjust belt tracking as described in the Belt Tracking Adjustment section.
- Adjust the coolant flow using the coolant valve. A small coolant flow is generally sufficient and excessive flow should be avoided to minimise splashing.

Hollow Grinding and Sharpening

- Place the knife against the grinding belt and hold it securely with both hands.
- Ensure the cutting edge is always facing the rear of the machine.
- Press the knife against the grinding belt at the required angle:
    - 10° for hollow grinding.
    - 20° for sharpening.
- Sharpen the first side of the knife while maintaining a consistent angle.
- Repeat the process on the opposite side of the blade.
- Continue until both sides have a consistent appearance and a burr forms along the cutting edge.

Sharpening Tips

Maintain a regular movement across the grinding belt to achieve an even finish.

When sharpening the tip of the knife, rotate the blade to follow its natural profile.

Use the full width of the grinding belt wherever possible to maximise belt life.

Avoid excessive pressure and allow the abrasive belt to perform the cutting action.



Edge Finishing and Polishing

Once a uniform burr has formed along the entire cutting edge on the grinding belt:

Move to the felt polishing wheel on the left-hand side of the machine. (Note: Depending on your setup, flap, mix, or ceramic wheels may also be mounted to this quick-change spindle.)

While the wheel is spinning, lightly press a bar of polishing paste compound against the felt wheel to apply a thin, even layer.

Position the knife against the polishing wheel at an approximate 20° angle.



Pass each side of the blade lightly across the wheel, alternating sides evenly until the burr has been completely removed and a clean, polished cutting edge is achieved.

Shutdown Procedure

When sharpening is complete:

- Switch the machine OFF.
- Allow all moving components to come to a complete stop.
- Clean any swarf or debris from the machine.
- Check coolant level and condition.
- Leave the machine in a clean and safe condition ready for the next operator.

Routine Maintenance

Regular maintenance will improve sharpening performance and extend consumable life.

Daily Maintenance

- Clean the machine and surrounding work area.
- Remove grinding residue and metal particles.
- Check the condition of the grinding belt.
- Check coolant level.
- Inspect coolant flow during operation.

Weekly Maintenance

- Check belt tracking and adjust if required.
- Inspect the grinding belt for excessive wear.
- Inspect coolant hoses and fittings for leaks.
- Clean coolant build-up from machine surfaces.

Coolant & Tank Maintenance

- **Safety First:** Always switch the machine OFF and disconnect it from the 230V power outlet before performing any cleaning or maintenance.
- **Maintain 5% Concentration:** Top up evaporated water with a 5% water-to-coolant mixture to prevent rust and oxidation on machine parts and knife blades.
- **Clean Tank Sludge:** Periodically drain the coolant tank and clean out the metal swarf and grinding sludge ("mud") that settles at the bottom.
- **Clean Pump Intake Cap:** Occasionally remove the coolant pump from the tank, unscrew the pump body cap, and clean out any accumulated debris from the housing.
- **Prevent Dry Running:** Always ensure the electric pump is completely submerged during operation; running the pump dry can burn out the motor.
- **Full Coolant Replacement:** Replace the entire coolant batch whenever it becomes contaminated, dirty, or begins to break down.

Changing the Polishing Wheel

The X7 Series is fitted with a quick-change polishing wheel system for fast replacement of polishing tools.

To Replace the Polishing Wheel

- Switch the machine OFF using the main power switch.
- Position the Polisher (P) onto the shaft, aligning the slot in the polishing wheel with the Bayonet Cap (E).
- Turn the Polisher (P) clockwise until the Bayonet Cap (E) locks into position.
- Tighten the Retaining Screw (T).

Important

- Ensure any key or tool used to tighten the Retaining Screw (T) is removed before starting the machine.
- Verify the polishing wheel is securely fitted before operation.
- Do not operate the machine if the polishing wheel is loose or incorrectly installed.



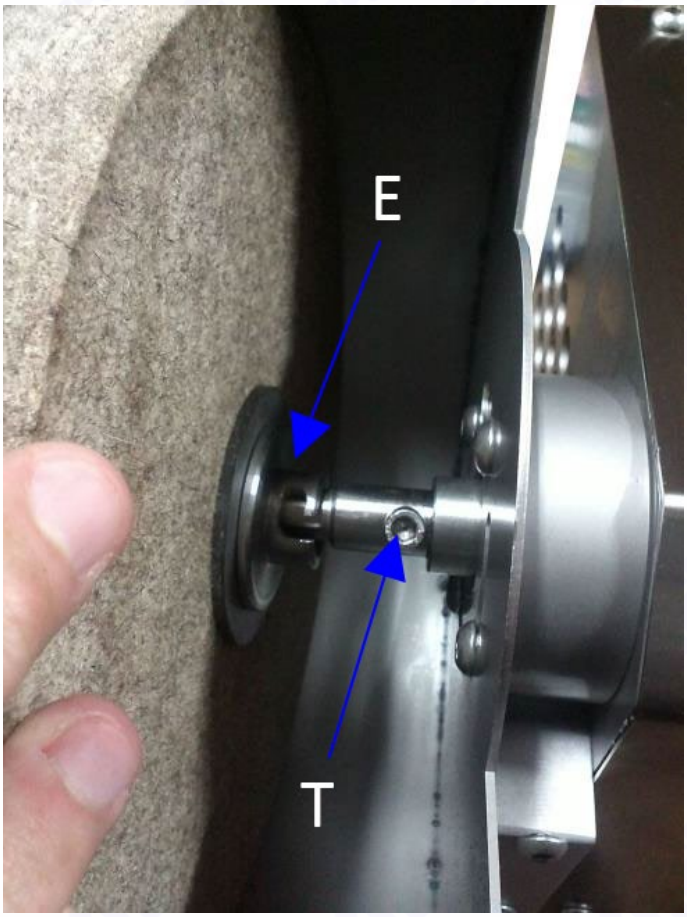

Consumables / Spare Parts

Code	Name	Image	Specifics / Application
139 X7CO*	X7 Grinding Belt Conglomerate		*80 - Abrasive Grit: 80 | *120 - Abrasive Grit: 120 | Grinding Belt for Model X7 – sold in 10 pack Abrasive Type: Conglomerate Belt Dimensions: 50 x 950 mm
139 X7CU*	X7 Grinding Belt Cubitron	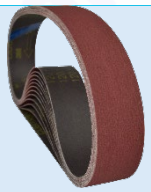	*80 - Abrasive Grit: 80 | *120 - Abrasive Grit: 120 | *150 – Abrasive Grit 150 Grinding Belt for Model X7 – sold in 10 pack Abrasive Type: Cubitron Belt Dimensions: 50 x 950 mm
139 X7QC	X7 Quick Change System		**Application:** Quick Change Mounting of Polishing Wheels and Compatible Grinding Wheels
139 X7PB	X7 Centering Plate for 139 X7TB25 & 139 X7FS25	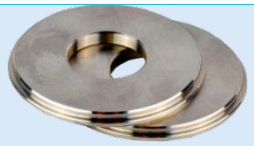	Centring Plates for X7 Polishing Wheels Type: Centring Plate B Compatible Wheels: 139 X7TB25 and 139 X7FS25, Compatible Quick Change Bushing: 139 X7QC
139 X7PC	X7 Centering Plate for 139 X7FS50		Centring Plates for X7 Polishing Wheels Type: Centring Plate C Compatible Wheels: 139 X7FS50, Compatible Quick Change Bushing: 139 X7QC
139 X7PD	X7 Centering Plate for 139 X7AL80 & 139 X7AL100	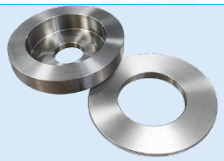	Centring Plates for X7 Polishing Wheels Type: Centring Plate D Compatible Wheels: 139 X7AL80 & 139 X7AL100, Compatible Quick Change Bushing: 139 X7QC
139 X7AL*	Abrasive Lamellar Polisher		*80 - Abrasive Grit: 80 **|** *100 - Abrasive Grit: 100 **Application:** Knife Edge Deburring Abrasive lamellar Polisher for X7 Compatible Quick Change Bushing: 139 X7QC Compatible Centring Plates: 139 X7PD
139 X7CP35	X7 Cotton Polisher		**Application:** Knife Edge Deburring and polishing Pleated Cotton Polishing Wheel for X7 Compatible Quick Change Bushing: 139 X7QC
139 X7FP25	X7 Felt Polisher		Felt Polishing Wheel for X7 **Application:** Knife Edge Deburring and polishing after belt sharpening, Compatible Quick Change Bushing: 139 X7QC

139 X7FS*	X7 Flap Scotch Polisher	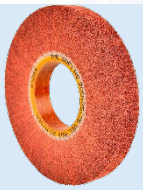	*25 - Width: 25mm **|** *50 - Width: 50 **Application:** Knife Edge Deburring & mirror effect Flap Scotch Polishing Wheel for X7 Compatible Quick Change Bushing: 139 X7QC Compatible Centring Plates: 139 X7PB
139 X7TB25	X7 Mixed polisher TBM+Sandpaper		**Application**: Knife Edge Deburring, Suitable For: Thick Knives TBM & Sandpaper Combination Polishing Wheel Compatible Quick Change Bushing: 139 X7QC Compatible Centring Plates: 139 X7PB
139 X7SG	X7 Serrated Grinding Wheel	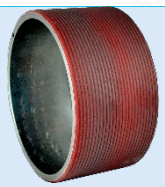	**Application**: Serrated Knife Edge Grinding, Tooth Pitch: 0.5 to 10 mm Serrated Grinding Wheel for X7 Compatible Quick Change Bushing: 139 X7QC
139 X7UT1	X7 Scissors Attachment		**Application:** Scissor Sharpening, Angle Adjustment: Adjustable Clamp, UT1 Scissor Sharpening Attachment for X7 **Includes**: 1 x Sharpening Wheel (200 x 25 x 32 mm), Quick Change Bushing for X7, Angle Checking Ruler, Grinding Wheel Dressing Bar

Exploded View

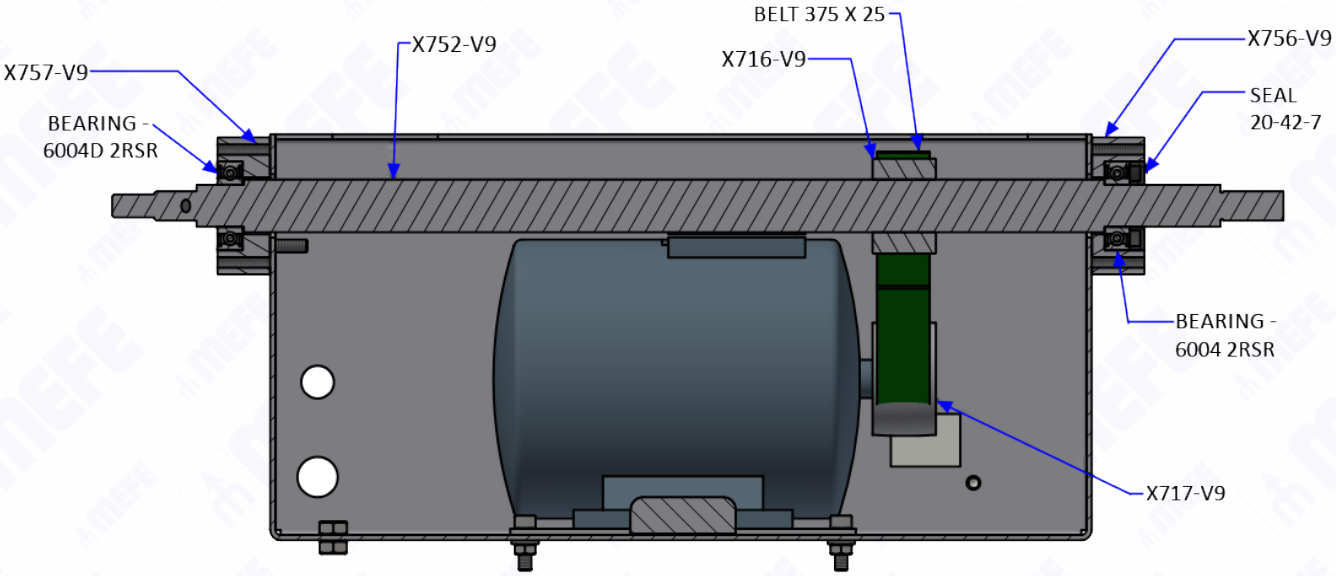

TENSIONER PULLEY X7
SECTION

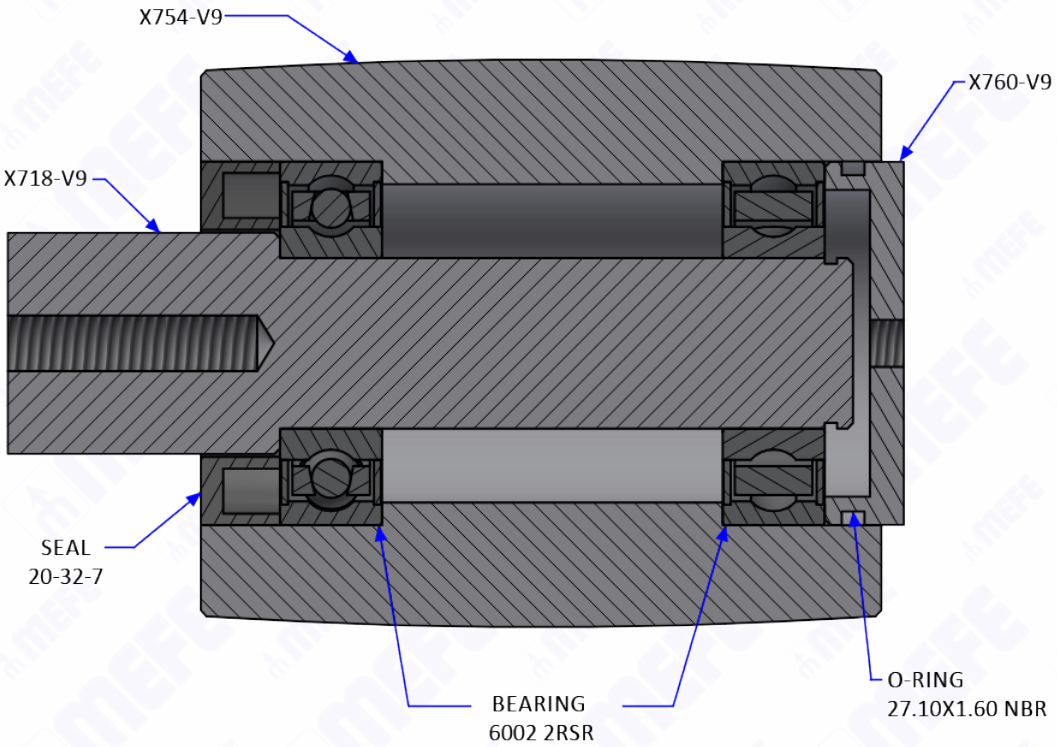

Wiring Diagram

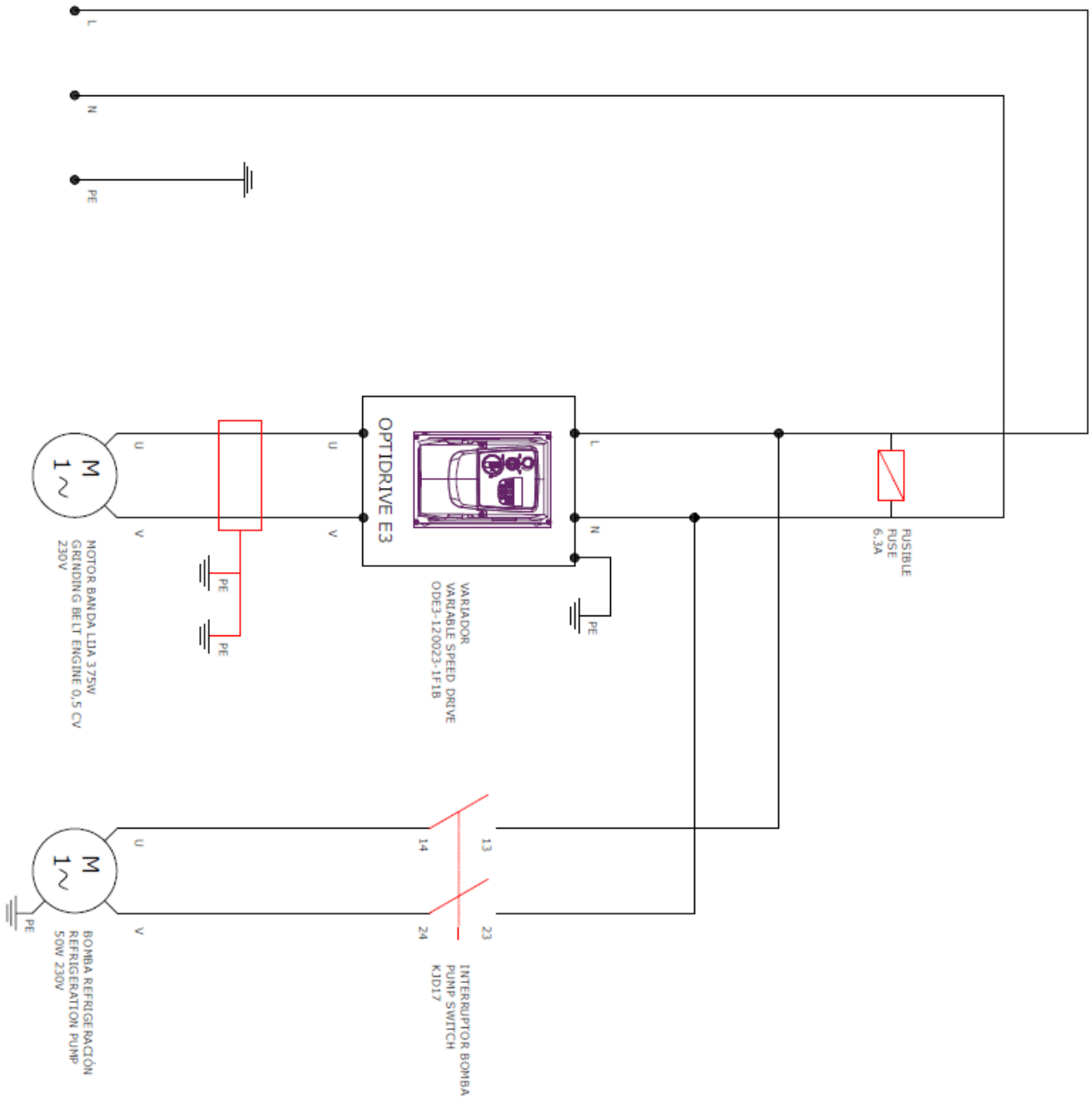

www.mefe.com.au | 07 3283 4536 | orders@mefe.com.au

23-25 Storie Street. Clontarf, QLD, 4019, Australia

12 November 2026