Sensor Tap – Tall Upright

Up to 70% in water savings!

Hygienic – zero cross contamination.

No electrical wiring required.

No-touch and easy to use.

The more stars the more water efficient

WATER RATING

www.waterrating.gov.au

5.5 litres per minute

In accordance with AS/NZS 6400

Licence No. 1718

Mitchell Engineering Food Equipment Pty Ltd

WaterMark

WM-022559

AS/NZS 3718

MEFE

CAT 67917
Sensor Tap - Tall Upright
Deck Mounted - Stainless Steel

Dimensions:
Tall Upright Spout - 18.5cm high
Tap: 18.5 x 16 x 3.5cm, 0.7kg
Boxed: 28 x 22 x 10cm, 1.4kg

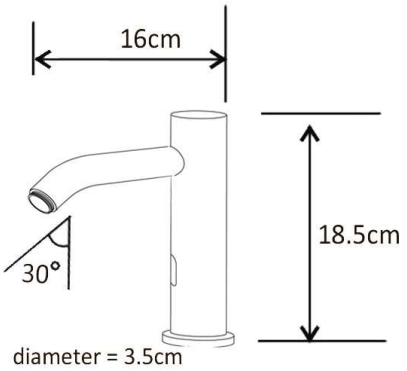

Features:
Employs the latest plug and play digital infrared sensor technology.
Hygienic – zero cross contamination.
No-touch and easy to use – ideal for children, elderly & disabled
Simple installation – supplied with everything you need and easily replaces existing ½" connections.
No electrical wiring required – takes 4 x AA batteries or use the 240 V transformer included.
AUS & NZ WaterMark certified
6 star WELS water efficiency rating.

Specifications:
Deck Mounted.
Stainless Steel.
Standard ½" connection.
Adjustable sensing: 5cm to 22cm
Water Pressure: 0.07-0.7Mpa

Includes:
Upright spout with fitted sensor.
Braided hose.
Solenoid box - fitted with solenoid valve and battery housing.
Optional 240V transformer (only used if not using batteries)
Instruction manual.

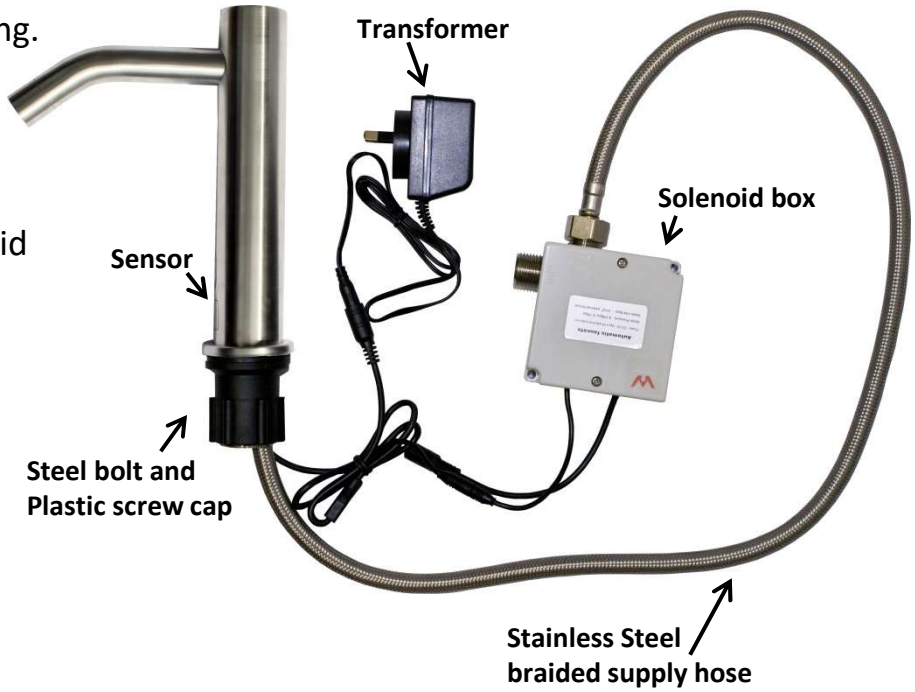

Available in two colors

CAT 67917 – Stainless Steel

CAT 67917B– Matte Black

CAT 67917

CAT 67917B

Our versatile and stylish Automatic Sensor Taps are well suited to virtually any environment - whether for personal or professional use. All of our taps are WaterMarked certified with a 6 star WELS water efficiency rating, signifying that the taps are nationally certified whilst also environmentally and economically friendly.

WaterMark
WM - 022559
AS/NZS 3718

1800 669 006
info@mefe.com.au www.mefe.com.au
Tel: 07 3283 4536 Fax: 07 3283 4482

MEFE